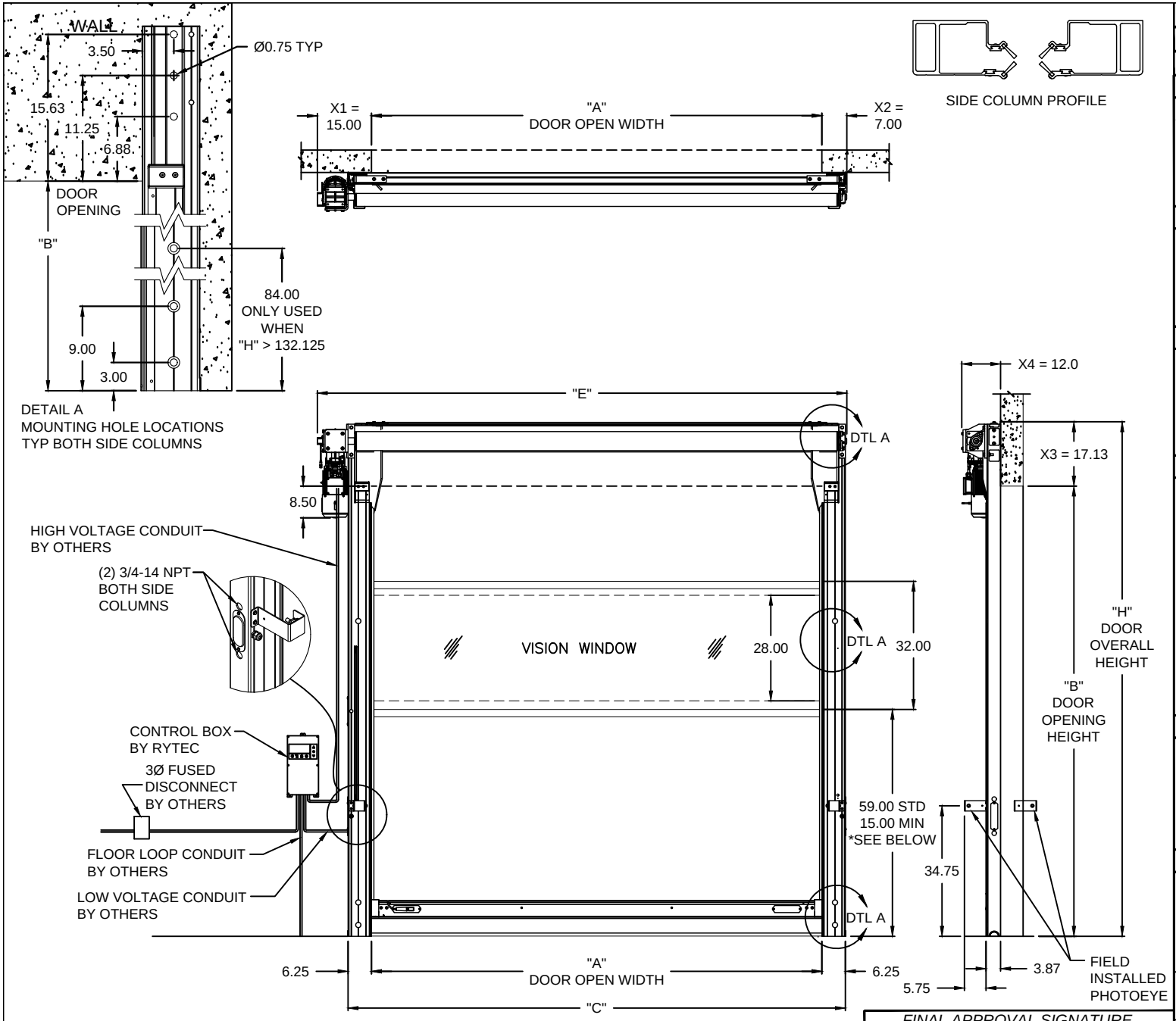

	X1	X2	X3	X4
WITHOUT HOOD	15.00	7.00	17.13	12.00
ALUMINUM HOOD	16.00	8.00	20.13	17.50
PLASTIC HOOD	16.25	8.50	20.00	15.50

C = A + 12.50
E = A + X1 + X2
H = B + X3

* WINDOW LOCATION LOWERED IF TOP RIB EXCEEDS DOOR OPENING HEIGHT (B).
* MAINTAIN 32 INCH SPACING BETWEEN ALL RIBS.

FINAL APPROVAL SIGNATURE

FABRICATION CAN PROCEED ACCORDING TO THE SPECIFICATION SHOWN EXCEPT AS NOTED

APPROVED BY:

PRINT NAME: _____

SIGNATURE: _____

DATE: _____

DRAWING NOT TO SCALE, ALL DIMENSIONS IN INCHES

DOOR NO.	A	B	C	E	H

PANEL OPTIONS

VINYL (–$)	2PLY	3PLY ($)	USDA ($)
☐ BLUE	☐ BLUE	☐ BLUE	☐ WHITE
☐ ORANGE	☐ ORANGE	☐ ORANGE	☐ BLUE
☐ WHITE	☐ GRAY	☐ GRAY	MATTE ($)
	☐ BROWN	☐ BROWN	☐ RED

ELECTRICAL OPTIONS

- ☐ 460v – 3ph
- ☐ 230v/208v – 3ph
- ☐ 230v – 1ph
- ☐ 480v OPEN DELTA, UNGROUNDED ($)
- ☐ 575v – 3ph ($) (INCLUDES NEMA 4 METAL ENCLOSURE WITH 575/460 TRANSFORMER)

STANDARD FEATURES

1. WIRELESS BOTTOM BAR (NO COIL CORD)
2. SEMI–AUTOMATIC SELF REPAIRING BOTTOM BAR
3. (2) SAFETY PHOTOEYES (FIELD INSTALLED)
4. (2) SETS PATHWATCH SAFETY SYSTEM.
5. DUAL AIR REVERSING EDGE
6. CLEAR VISION WINDOW, FULL WIDTH

UPGRADE OPTIONS

- ☐ ALUMINUM HOOD ($)
- ☐ PLASTIC HOOD AND MOTOR COVER ($)
- ☐ RIGHT HAND DRIVE (LH STD.)
- ☐ ROTARY DISCONNECT (NON–FUSED) ($)
- ☐ BTA4 (BLUETOOTH ACCESS TERMINAL) ($)
  NIGHT SWITCH FUNCTION: _____
- ☐ SELECTOR SWITCH ON CONTROL BOX ($)
  FUNCTION: _____
- ☐ TEMP < 50° REQR LOW TEMP PVC

WINDRIB TYPE: ☒ ALUMINUM
☐ WHITE FIBERGLASS ☐ BLACK FIBERGLASS

ACTIVATION OPTIONS ($)

- ☐ __ PUSHBUTTON
- ☐ __ PULL CORDS
- ☐ __ MOTION DETECTOR
- ☐ __ PRESENCE DET.
- ☐ __ MOTION/PRESENCE
- ☐ DUAL LOOP CONTROLLER
- ☐ RADIO CONTROL RCVR (INCLUDE MIN 2 XMIT)
  - __ 1 BTN TRANSMITTER
  - __ 2 BTN TRANSMITTER
  - __ 4 BTN TRANSMITTER

OPTION NOTES

($) = PRICING CHANGE IF NOT INCLUDED IN QUOTE

PLEASE SPECIFY PANEL COLOR AND VOLTAGE

RYTEC CORPORATION
ONE CEDAR PARKWAY, JACKSON, WI 53037–0403

APPROVAL DRAWING
PREDADOOR NXTò - SYSTEM 4+

CUSTOMER:

LOCATION:

DATE: REV.: A

DRAWING NO.: 601–01T