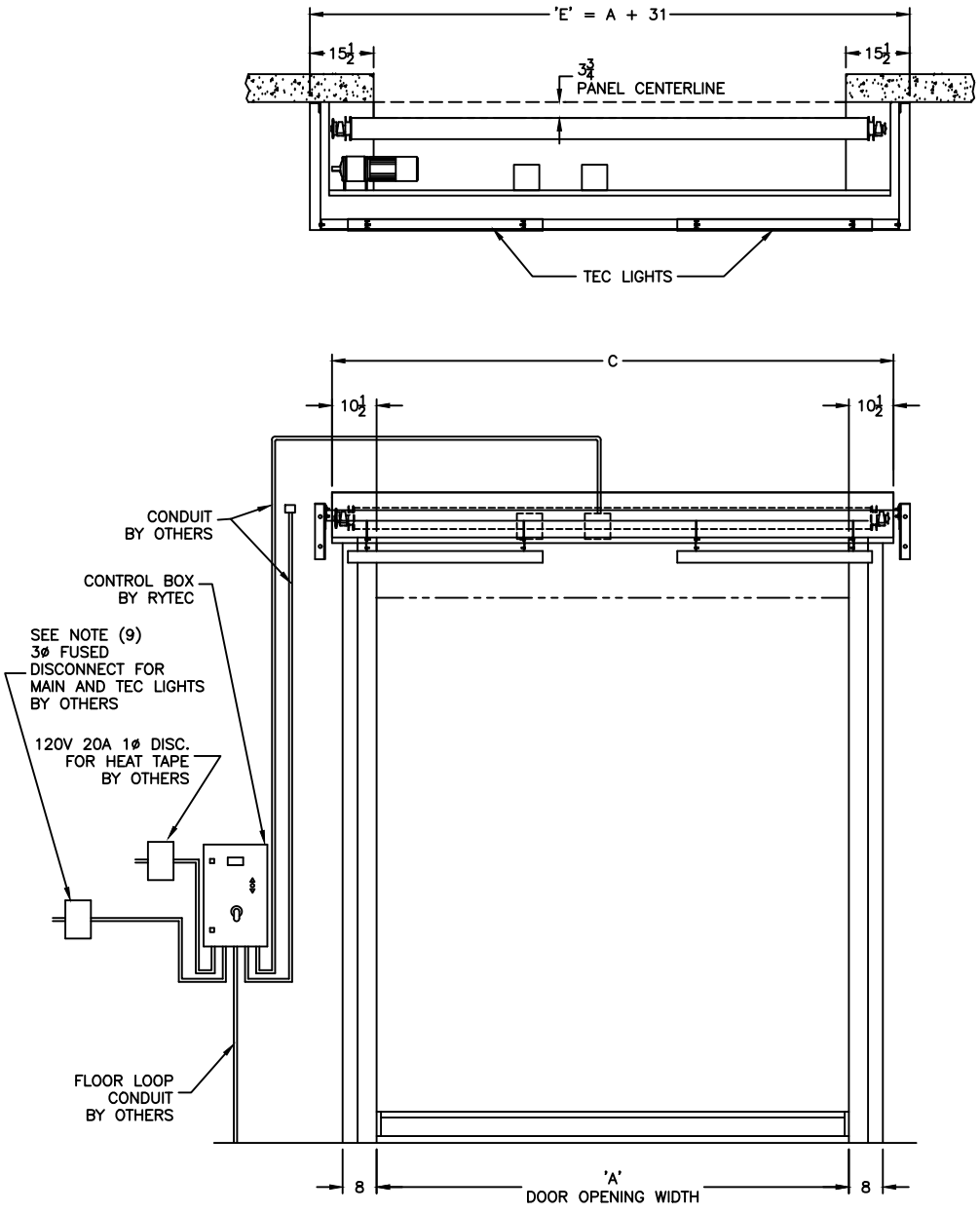

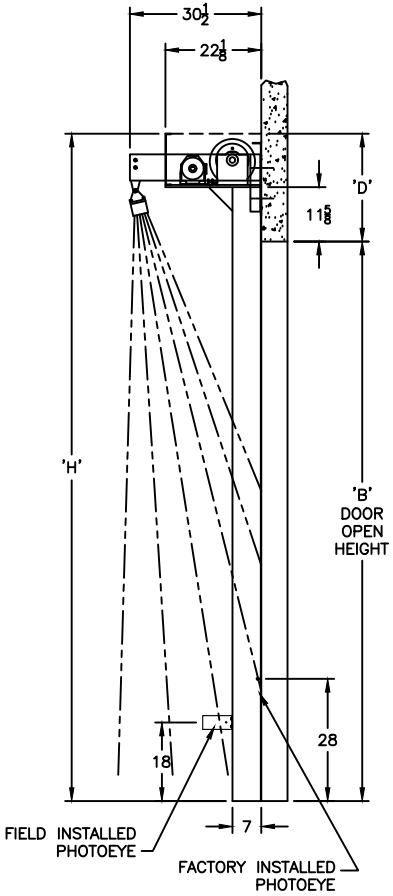

NOTES:
RYTEC CORP. DOES NOT GUARANTEE A FROST FREE DOOR. THE RANGE OF THE TEC LIGHTS IS APPROXIMATELY TEN (10) VERTICAL FEET. DEPENDING ON SITE CONDITIONS AND RELATIVE HUMIDITY, IT IS POSSIBLE FOR FROST TO BUILD UP ON THE LOWER PORTION OF THE DOOR PANEL.
DOOR, CONTROL PANEL, AND DEFROST SYSTEM MUST BE MOUNTED TO THE WARM SIDE OF THE OPENING.

DRAWING NOT TO SCALE, ALL DIMENSIONS IN INCHES

DOOR NO.	A	B	C	D	E	H
–	–	–	–	23	–	–

PANEL OPTION

2PLY (STD)	3PLY ($)	USDA ($)
☐ BLUE	☐ BLUE	☐ WHITE
☐ ORANGE	☐ ORANGE	☐ BLUE
☐ GRAY	☐ GRAY	MATTE
☐ BROWN	☐ BROWN	☐ RED

ELECTRICAL OPTIONS

☐ 460v – 3ph
☐ 480v OPEN DELTA, UNGROUNDED ($)
☐ 575v – 3ph ($) (INCLUDES NEMA 4 METAL ENCLOSURE WITH 575/460 TRANSFORMER)

STANDARD FEATURES

1. WIRELESS BOTTOM BAR (NO COIL CORD)
2. (1) FACTORY INSTALLED SIDE COLUMN PHOTOEYE
3. (1) FIELD INSTALLED PHOTOEYE
4. FRONT HEAT LAMPS MOUNTED INDEPENDENTLY ON WALL
5. HEAT TAPE IN SIDE COLUMNS & ACROSS SPREADER. (SEPARATE 120V, 20 AMP POWER SUPPLY OR SINGLE SOURCE TRANSFORMER REQUIRED)
6. STEEL NEMA 4 CONTROL PANEL ENCLOSURE WITH FUSED ROTARY DISCONNECT FOR TEC LIGHTS
7. LH MOTOR ASSEMBLY ONLY
8. 460V & 575V REQUIRE 30 AMP SERVICE
9. HOOD NOT AVAILABLE

UPGRADE OPTIONS

17" LOW TEMP WINDOW ($): ☐ ONE ☐ TWO ☐ THREE
(WINDOWS ARE NOT RECOMMENDED IN FREEZERS)
☐ SINGLE SOURCE TRANSFORMER ($)
☐ MOTOR HEATER ($)
☐ CONTROL PANEL HEATER ($)
☐ BTA4 (BLUETOOTH ACCESS TERMINAL) ($)
NIGHT SWITCH FUNCTION: _____
☐ SELECTOR SWITCH ON CONTROL BOX ($)
FUNCTION: _____

ACTIVATION OPTIONS ($)

☐ __ PUSHBUTTON
☐ __ PULL CORDS
☐ __ MOTION DETECTOR
☐ __ PRESENCE DET.
☐ __ MOTION/PRESENCE
☐ DUAL LOOP CONTROLLER
☐ RADIO CONTROL RCVR (INCLUDE MIN 2 XMIT)
__ 1 BTN TRANSMITTER
__ 2 BTN TRANSMITTER
__ 4 BTN TRANSMITTER

OPTION NOTES

($) PRICING CHANGE IF NOT INCLUDED IN QUOTE

PLEASE SPECIFY PANEL COLOR AND VOLTAGE

FINAL APPROVAL SIGNATURE

FABRICATION CAN PROCEED ACCORDING TO THE SPECIFICATION SHOWN EXCEPT AS NOTED

APPROVED BY:

PRINT NAME: _____

SIGNATURE: _____

DATE: _____

RYTEC CORPORATION
ONE CEDAR PARKWAY, JACKSON, WI 53037–0403

APPROVAL DRAWING

TURBO SEAL® FREEZER w/ TEC LIGHTS- SYSTEM 4

CUSTOMER:

LOCATION:

DATE:

DRAWING NO.: 401054–00T REV.: –