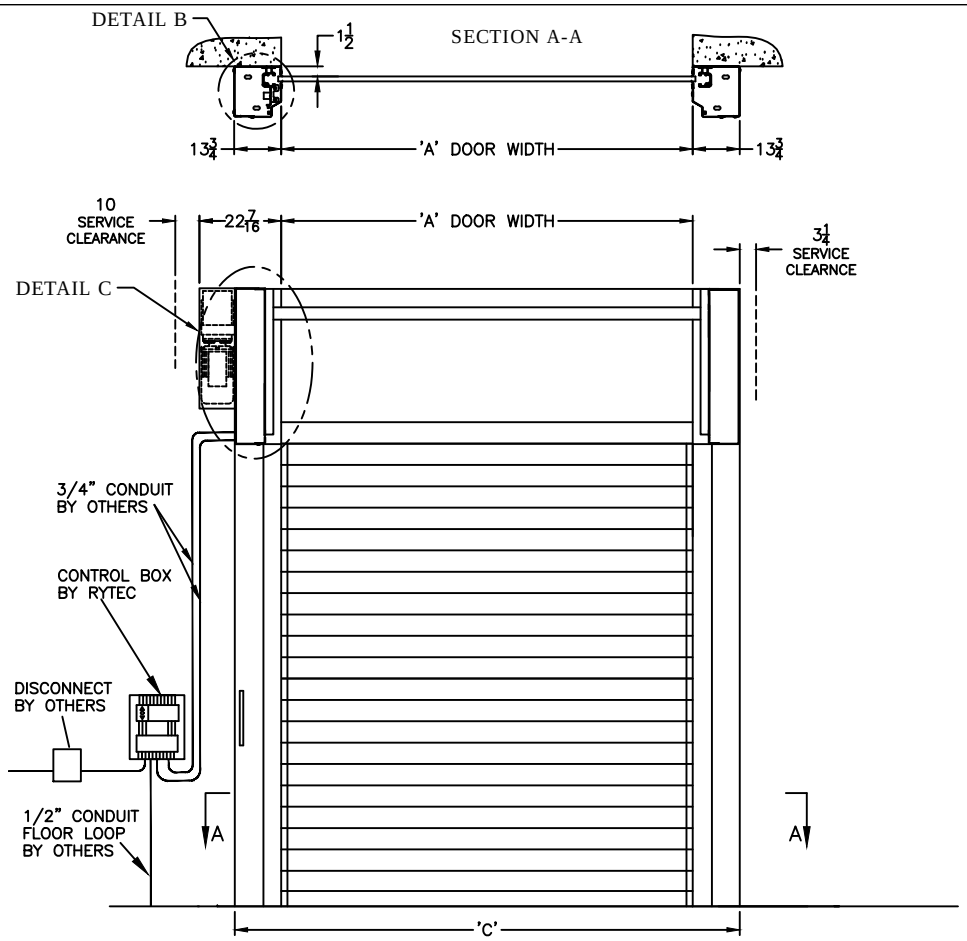

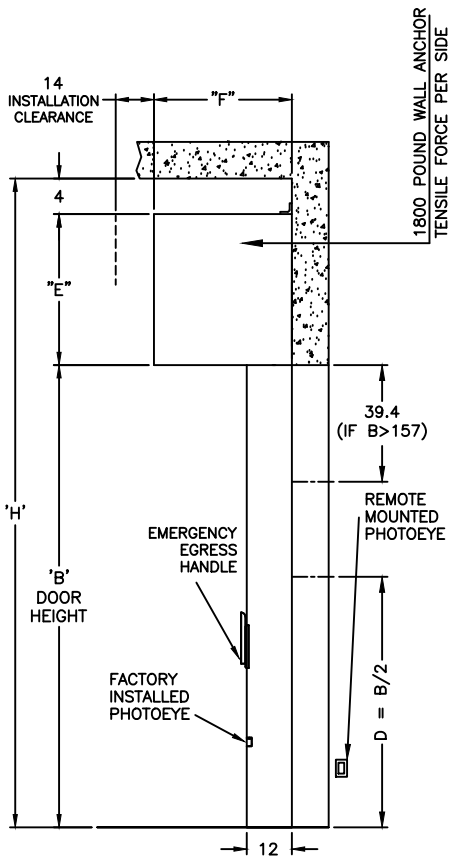

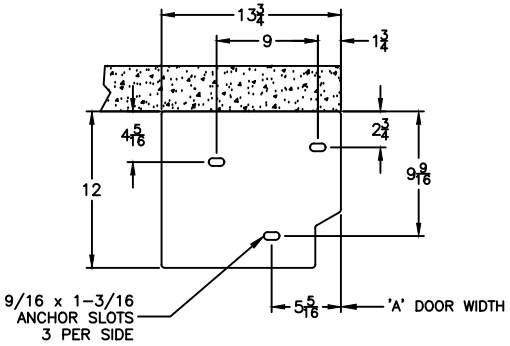

DETAIL B

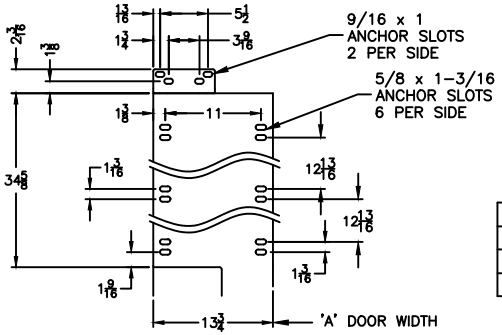

DETAIL C

HEIGHT (B)	E	F	X1
<= 196"	35	33	12.8
197" – 252"	37	36	13.9
253" – 275"	40	39	15.2

DIMENSIONAL VARIABLES

DRAWING NOT TO SCALE; DIMENSIONS IN INCHES

DOOR NO.	A	B	C	H
MILLIMETERS				

ACTUAL DOOR SIZE IS PRODUCED IN MILLIMETERS
REQUESTED DOOR SIZE IS CONVERTED TO MILLIMETERS AND ROUNDED UP TO THE NEAREST 10MM

ELECTRICAL OPTIONS

- ☐ 460v – 3ph
- ☐ 230v/208v – 3ph
- ☐ 230v – 1ph
- ☐ 480v OPEN DELTA, UNGROUNDED ($)
- ☐ 575v – 3ph ($) (INCLUDES NEMA 4 METAL ENCLOSURE WITH 575/460 TRANSFORMER)

STANDARD FEATURES

1. ONE THRU–BEAM PHOTOEYE SET MOUNTED IN SIDE COLUMN AT 16" FROM FLOOR–FACTORY INSTALLED.
2. ONE THRU–BEAM PHOTOEYE SET–FIELD INSTALLED.
3. VARIABLE DOOR OPENING SPEED; UP TO 40"/SEC
4. DOOR CLOSING SPEED OF 20"/SECOND
5. PROGRAMMABLE UPPER AND LOWER LIMITS
6. SYSTEM 4 CONTROL BOX (8.5"X16.5")
7. BRAKE RELEASE LEVER ON SIDE COLUMN
8. ELECTRICAL FAIL SAFE REVERSING EDGE.

UPGRADE OPTIONS

BRAKE RELEASE LEVER:
- ☒ SIDE COLUMN ☐ REMOTE MOUNT ($) ☐ BOTH ($)
- ☐ FLAT HOOD (INCLUDES FRONT/BOTTOM COVERS) ($)
- ☐ FRONT AND BOTTOM HEAD COVERS ($) (BOTTOM COVER WILL PROJECT 1.5" BELOW "B")
- ☐ RIGHT HAND DRIVE
- ☐ ROTARY DISCONNECT ($)
- ☐ SELECTOR SWITCH ON CONTROL BOX ($) FUNCTION: _____

PANEL OPTIONS

☐ INSULATED SOLID SLATS ($)

WINDOWS ($)
☐ 1 ☐ 2 ☐ 3 ☐ 4 ☐ OTHER ____

VENTS ($)
☐ 1 ☐ 2 ☐ 3 ☐ 4 ☐ OTHER ____

UP TO TWO (2) VISION/VENT SLATS PER GROUP WITH AT LEAST ONE (1) SOLID SLAT SEPARATING GROUPS.

MAXIMUM TEN (10) VISION/VENT SLATS TOTAL IF A<=275
MAXIMUM FOUR (4) VISION/VENT SLATS TOTAL IF A>275

ACTIVATION OPTIONS ($)

- ☐ __ PUSHBUTTON
- ☐ __ PULL CORDS
- ☐ __ MOTION DETECTOR
- ☐ __ PRESENCE DET.
- ☐ __ MOTION/PRESENCE
- ☐ DUAL LOOP CONTROLLER
- ☐ RADIO CONTROL RCVR (INCLUDE MIN 2 XMIT)
  - __ 1 BTN TRANSMITTER
  - __ 2 BTN TRANSMITTER
  - __ 4 BTN TRANSMITTER

OPTION NOTES

($) = PRICING CHANGE IF NOT INCLUDED IN QUOTE

FINAL APPROVAL SIGNATURE

FABRICATION CAN PROCEED ACCORDING TO THE SPECIFICATION SHOWN EXCEPT AS NOTED

APPROVED BY:

PRINT NAME:_____

SIGNATURE: _____

DATE: _____

RYTEC CORPORATION
ONE CEDAR PARKWAY, JACKSON, WI 53037–0403

APPROVAL DRAWING

SPIRAL MODEL SST-US/R (EFAFLEX)

FOR DOOR WIDTH UP TO 26'-3", HEIGHT UP TO 22'-11"

CUSTOMER:

LOCATION:

DATE: REV.:

DRAWING NO.: 401074–36T

REV	DESCRIPTION	DATE	BY